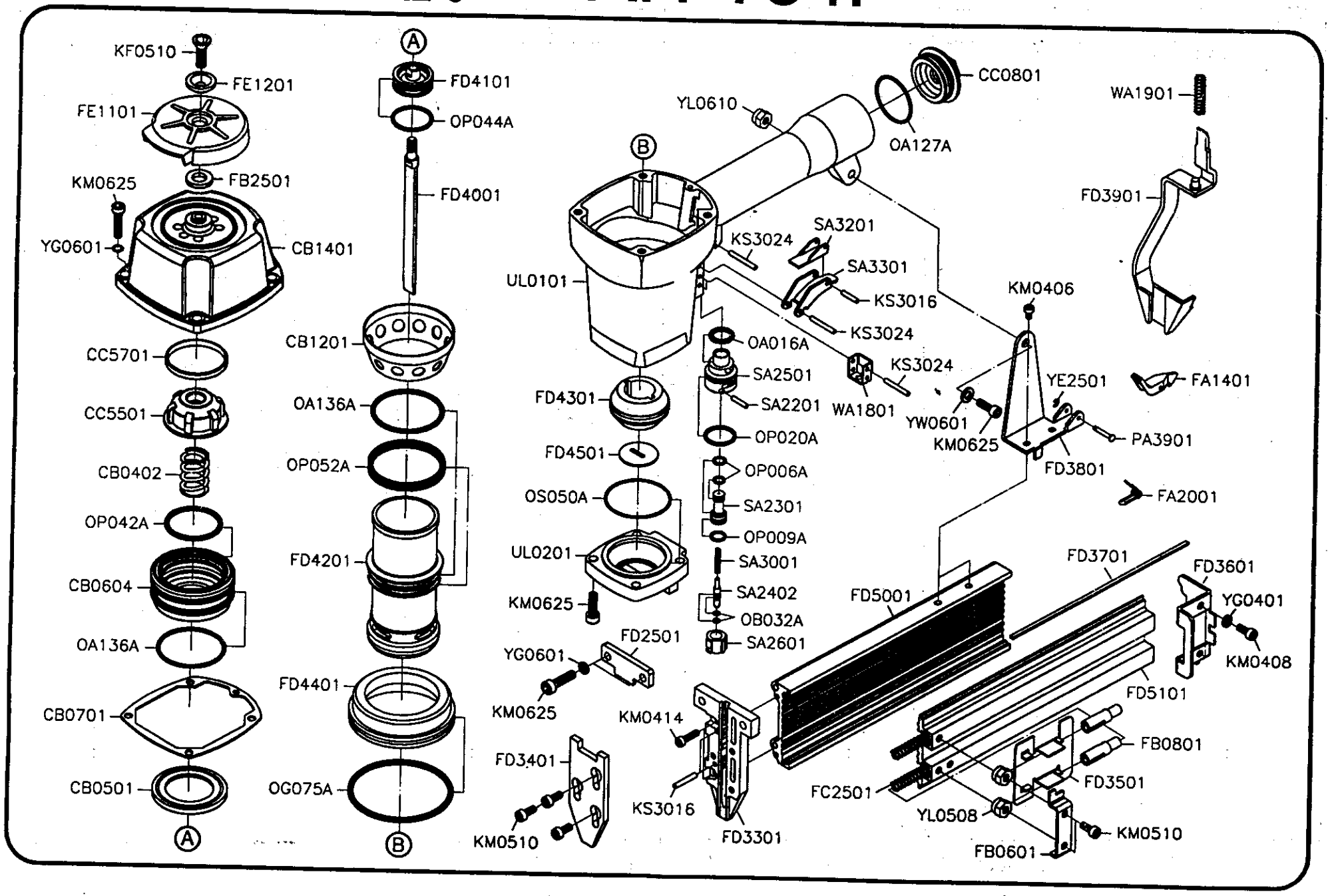# Proton Air® PAH-T64F