Proton Air® PAH-N50

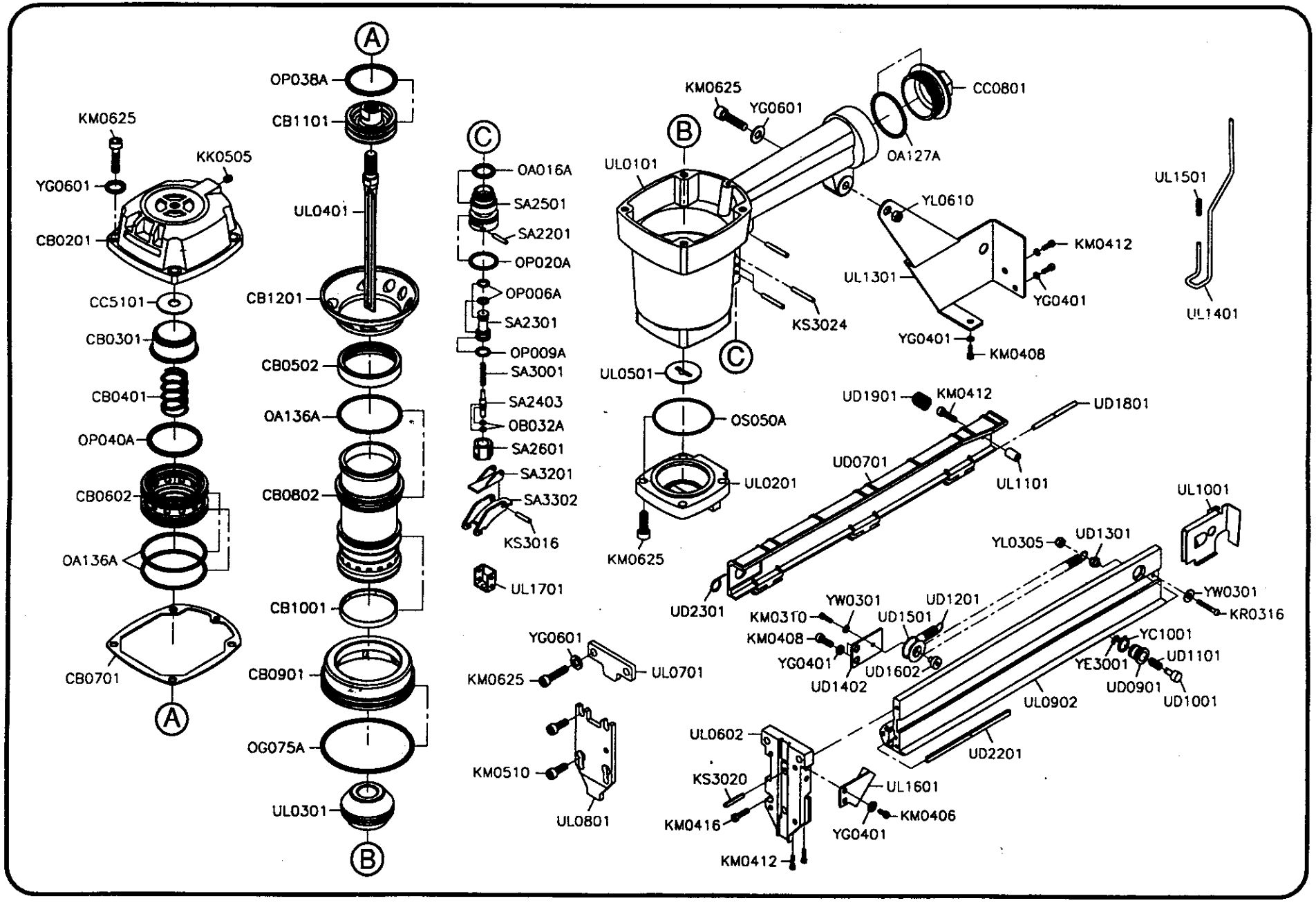

A